SIGN	DATE	DESCRIPTION	APPROVER
1	02/01'07	Part No. is changed.	Aaron
2	12/02'08	Flange screw changed from "-" to "+/-"	Tony
3	09.4.27	Part No. wire strip length are changed.	JODY
4	11/25'09	The Grey code changed from RAL7004/P to RAL7035/D	Kind
5	03/13'10	Add the 2P mark	RUNNER
6	04/08'10	Get rid of the rib	RUNNER

THIS IS CAD DRAWING, DO NOT REVISE MANUALLY!!!

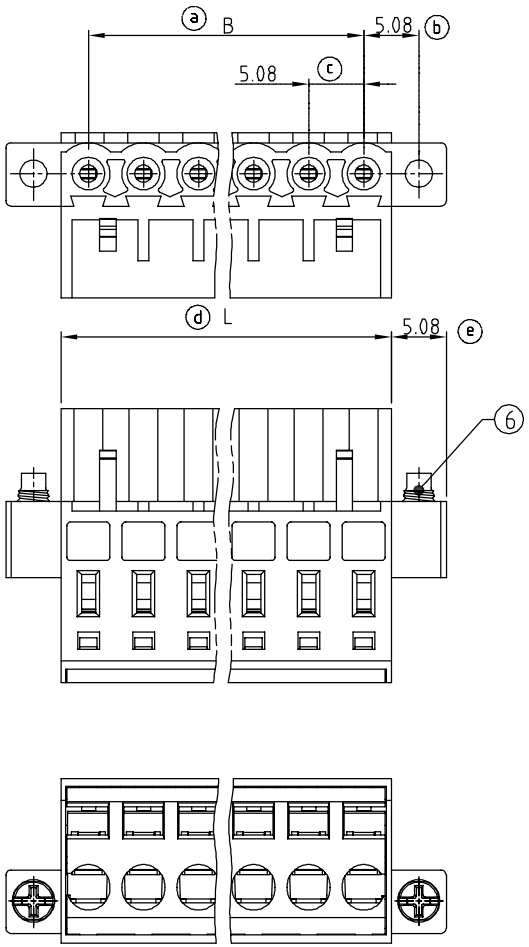

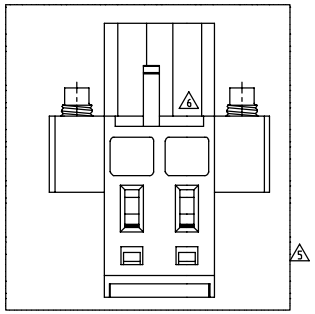

2P

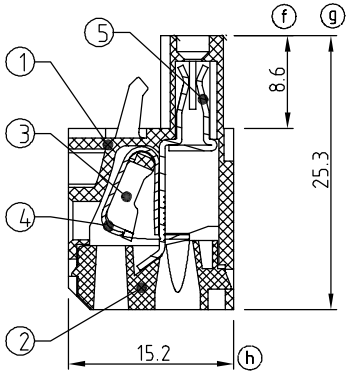

Material:

- Item 1 Terminal body:Thermoplastic (UL94V-0)
- Item 2 Terminal cover:Thermoplastic (UL94V-0)
- Item 3 Terminal spacer:Thermoplastic (UL94V-0)
- Item 4 Female contact:PhBz (CuSn) Tin plated
- Item 5 Wire guard:Stainless Steel
- Item 6 Wigh flange screw:Steel Zinc plating M2.5

Electrical: cULus

- Voltage rating: 300VAC
- Current rating: 10A
- Wire range:
- Solid wire(AWG): 12-26
- Stranded wire(AWG): 14-26
- 3 Wire strip length: 9-10mm
- Withstanding Voltage: 1.6KV
- Operating temperature: -40°C to +115°C
- Soldering temperature:
- Safety Approval: c UL us

PART NO.

HN xx 50 x 2 xxxx G 1 3

RoHS
Pb<40,000ppm

Poles
02 2Contacts
03 3Contacts
, ,
24 24Contacts

Color
0 Black
5 Green (RAL 6018/T)
6 Blue
4 8 Grey (RAL 7035/D)

0000 Standard @ Logo
000A Standard ANY Logo
Any special item by customer request, please contact sales department.

POLES	DIM L	DIM B	TOLERANCE	POLES	DIM L	DIM B	TOLERANCE
2P	10.16	5.08	+0.15 -0.15	13P	66.04	60.96	+0.35 -0.35
3P	15.24	10.16		14P	71.12	66.04	
4P	20.32	15.24		15P	76.20	71.12	
5P	25.40	20.32		16P	81.28	76.20	
6P	30.48	25.40		17P	86.36	81.28	
7P	35.56	30.48	+0.25 -0.25	18P	91.44	86.36	
8P	40.64	35.56		19P	96.52	91.44	+0.40 -0.40
9P	45.72	40.64		20P	101.60	96.52	
10P	50.80	45.72		21P	106.68	101.60	
11P	55.88	50.80		22P	111.76	106.68	
12P	60.96	55.88		23P	116.84	111.76	
				24P	121.92	116.84	

ANYTEK

CUSTOMER COPY

ALL RIGHTS RESERVED. REPRODUCTION OR ISSUE TO THIRD PARTIES IN ANY FORM WHATEVER IS NOT PERMITTED WITHOUT WRITTEN AUTHORITY FROM THE PROPRIETOR. PROPERTY OF ANYTEK TECHNOLOGY CO., LTD

TITLE	HN 5.08 SERIES WITH FLANGE				
PART NO.	HNxx50x2xxxxG			DWG NO.	8HN0002
APPROVED	CHECKED	DESIGNED	DRAWN	CUST NO.	
		Runner 2010.04.08	JDOY 2009.4.27	UNIT: mm / SCALE: NONE / SHEET: 01/01 / REV.: I	

Tolerance	
X.	±0.50
X.X	±0.30
X.XX	±0.10
X°	±1°