REV	DATE	DETAILS

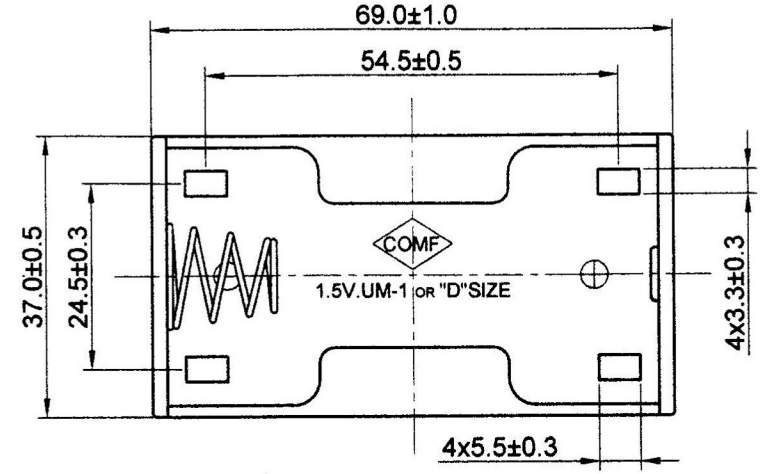

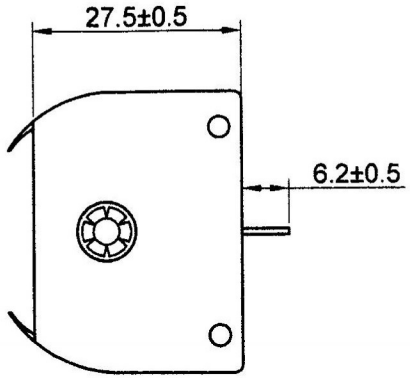

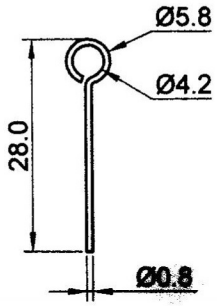

PIN

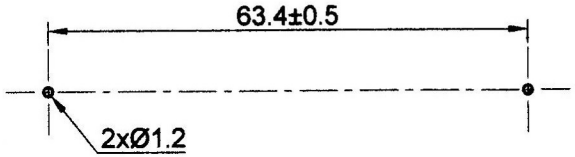

PCB/MOUNTING LAYOUT

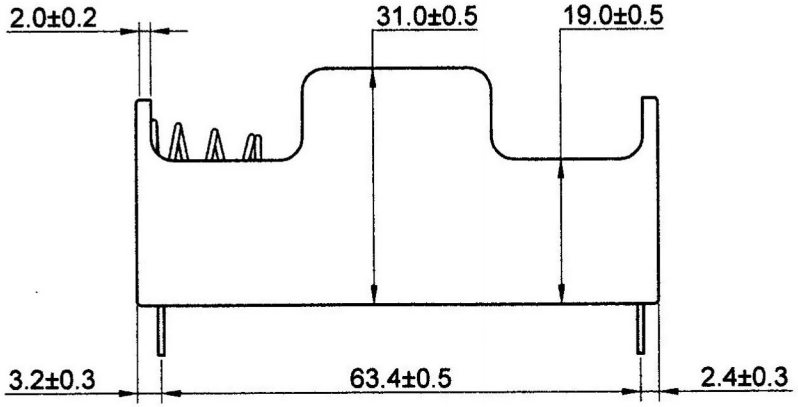

SPECIFICATION

(1) ITEM NO.: BH-111-1P28
(2) HOLDER MATERIAL: P.P. RESIN, BLACK COLOR
(3) PIN MATERIAL: Ø0.8x28MM, BRASS NICKEL PLATED
(4) SPRING MATERIAL: Ø0.8 MM SPRING STEEL NICKEL PLATED
(5) RIVET MATERIAL: BRASS NICKEL PLATED
(6) RoHS COMPLIANT

Product Characteristic

Voltage: 0V ~ 1.5V

Contact resistance: < 100mΩ

Operating temperature: -10℃ ~ +80℃

Pull Forced: 4 KGS

	APPROVED	CHECKED	DRAWN BY	UNIT	TOLARANCE	ITEM NUMBER	PART NAME	REV
JIA YI ELECTRONIC CO., LTD	NICK	ERIC	JACK	mm SCALE NOT	X.± 0.5 .X ± 0.3 .XX ± 0.2 .XX ± 0.1	BH-111-1P28		PAGE NO 1 / 1