| SIGN | DATE | DESCRIPTION | APPROVER |
|---|---|---|---|
| 1 | | | |
| 2 | | | |
| 3 | | | |

*THIS IS CAD DRAWING, DO NOT REVISE MANUALLY!!!*

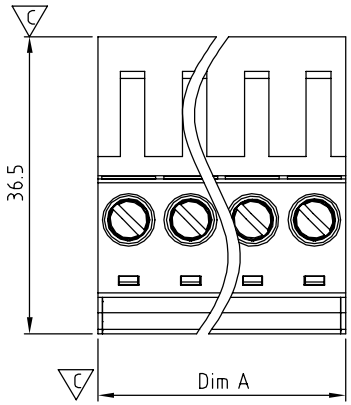


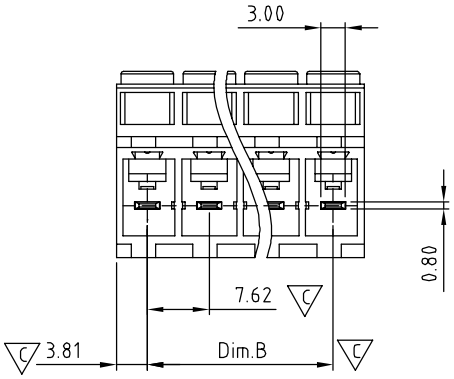


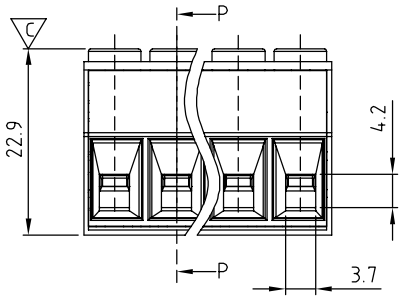


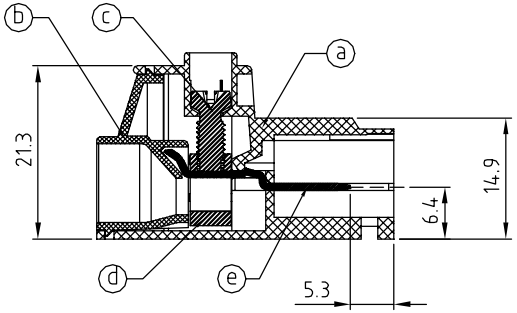


SECTION P-P

## Material

- Item ⓐ Terminal(housing) : PA66 (UL94V-0)
- Item ⓑ Terminal(cover) : PA66 (UL94V-0) ( ET 7.62 )
- Item ⓒ Terminal screw : Steel Zinc plating " - " slot type ( ET 7.62 )
- Item ⓓ Clamp : Brass, Ni plated ( ET 7.62 )
- Item ⓔ Female contact : Copper. Tin plated

## Electrical

- Voltage rating: 600VAC
- Current rating: 41A
- Solid wire (AWG): 8-24
- Stranded wire(AWG): 8-24
- Torque: 9.0 Lb-In
- Screw: M3.5
- Wire strip length: 10-11mm
- Withstanding Voltage: 1.6KV
- Operating temperature: -40°C to +115°C
- Safety Approval: c us
- Critical dimension: ▽c

K T xx 0 1 x 0 xxxx G

No. OF POLES
02: 2 POLES
:
:
16: 16 POLES

COLOR
0 Black (RAL9005)
5 Green(RAL6018/T)
6 Blue (RAL5015/A)
8 Grey(RAL7035/D)
C Green(RAL6018/U)

0000: "@" Logo (Standard)
000A: "ANYTEK" Mark
Any special item by customer requst. please contact sales department.

G: Pb<40000ppm

N = Number of poles

| | |
|---|---|
| Dim.A | N × 7.62 |
| Dim.B | (N-1) × 7.62 |

Dimension

| Poles | Tolerance |
|---|---|
| 2P-5P | ±0.20 |
| 6P-10P | ±0.30 |
| 11P-16P | ±0.40 |

**ANYTEK**

**CUSTOMER COPY**

ALL RIGHTS RESERVED. REPRODUCTION OR ISSUE TO THIRD PARTIES IN ANY FORM WHATEVER IS NOT PERMITTED WITHOUT WRITTEN AUTHORITY FROM THE PROPRIETOR. PROPERTY OF ANYTEK TECHNOLOGY CO., LTD

| | | | | | |
|---|---|---|---|---|---|
| TITLE | KT 7.62 Series 2P-16P " -" Screw ( Without Flange ) | | | | |
| PART NO. | KTxx01x0xxxxG | | | DWG NO. | 8KT0001 |
| APPROVED | CHECKED | DESIGNED | DRAWN | CUST NO. | |
| | | Aaron 2011.10.18 | Aaron 2011.10.18 | UNIT: mm / SCALE: NONE / SHEET: 01/01 / REV.: B | |

| Tolerance | |
|---|---|
| X. | ±0.50 |
| X.X | ±0.30 |
| X.XX | ±0.10 |
| X° | ±1° |