SIGN	DATE	DESCRIPTION	APPROVER
1	3/27'06	Dim changed form 2.6mm to 2.3mm	Marvin
2	3/27'06	Dim changed form (N-1)×3.81+5.0 to (N-1)×3.81+4.6	Marvin
3	1/29'07	Soldering temperature changed from 245° to 250°	Tony
4	2009.06.02	Dim changed form 2.3mm to 2.5mm	Jacke
5	2010.01.22	The demension is changed from 1.60mm to 1.10mm	Jacke
6	2010.01.22	The demension is changed from 0.40mm to 0.20~0.30mm	Jacke
7	2010.03.31	The material is changed from Brass to Copper	Jacke
		THIS IS CAD DRAWING, DO NOT REVISE MANUALLY!!!	

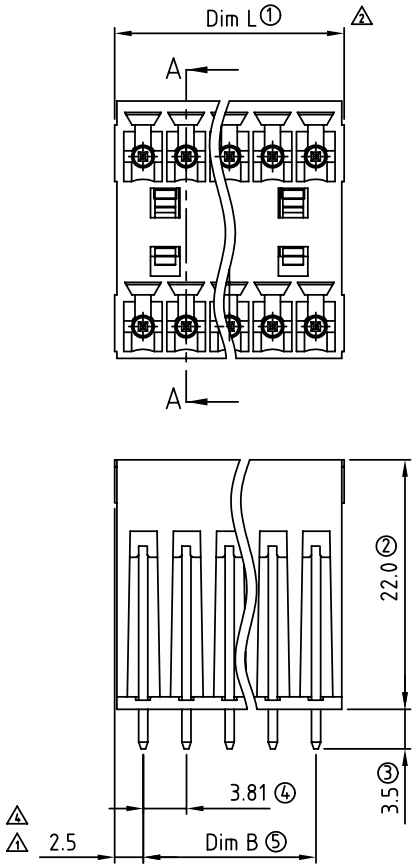

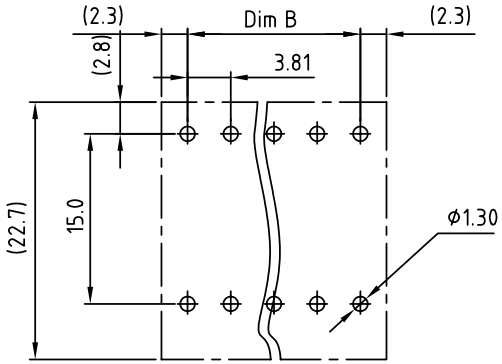

P.C.B. LAYOUT

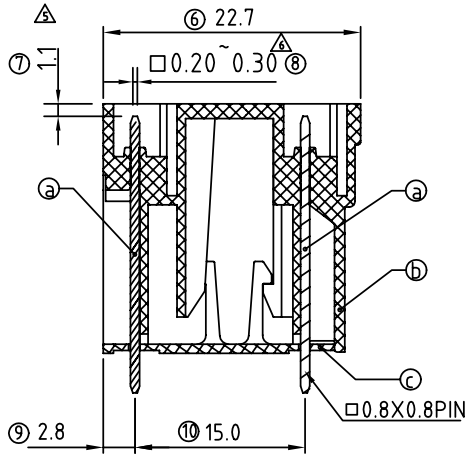

SECTION A-A

Material:

- Item ⓐ Male contact pin: Copper Tin plated
- Item ⓑ Terminal(housing): Thermoplastic (UL94V-0)
- Item ⓒ Terminal(cover): Thermoplastic (UL94V-0)

Electrical:	cULus
Voltage rating:	300V
Current rating:	10A
Withstanding Voltage:	1.6 KV
Operating temperature:	-40°C to +115°C
Soldering temperature:	250°C±10°C/5 Sec
Safety Approval:	c UL us

VL xx 3 1 x 0 xxxx G

- No. OF POLES: 04: 2×2 POLES ⋮ 48: 2×24 POLES
- COLOR: 0 Black (RAL9005); 2 Red (RAL3001/D); 3 Orange(RAL2011/P); 4 Yellow(RAL1018/A); 5 Green(RAL6018/T); 6 Blue (RAL5015/A); 8 Grey(RAL7035/D)
- 0000: "@" Logo (Standard); 000A: "ANYTEK" Mark; Any special item by customer requst. please contact sales department.
- G: Pb<40000ppm

Poles	02	03	04	05	06	07	08	09	10	11	12	13
Dim L	8.81	12.62	16.43	20.24	24.05	27.86	31.67	35.48	39.29	43.10	46.91	50.72
Dim B	3.81	7.62	11.43	15.24	19.05	22.86	26.67	30.48	34.29	38.10	41.91	45.72
TOL	±0.15			±0.20				±0.25				
Poles	14	15	16	17	18	19	20	21	22	23	24	
Dim L	54.53	58.34	62.15	65.96	69.77	73.58	77.39	81.20	85.01	88.82	92.63	
Dim B	49.53	53.34	57.15	60.96	64.77	68.58	72.39	76.20	80.01	83.82	87.63	
TOL	±0.30				±0.35							

ANYTEK

CUSTOMER COPY

ALL RIGHTS RESERVED. REPRODUCTION OR ISSUE TO THIRD PARTIES IN ANY FORM WHATEVER IS NOT PERMITTED WITHOUT WRITTEN AUTHORITY FROM THE PROPRIETOR. PROPERTY OF ANYTEK TECHNOLOGY CO., LTD

TITLE	VL-3.81mm Vertical 180° Series				
PART NO.	VLxx31x0xxxxG			DWG NO.	8VL0101
APPROVED	CHECKED	DESIGNED	DRAWN	CUST NO.	
		Jacke 2010.01.22	Jacke 2010.01.22	UNIT: mm	
				SCALE: NONE	
				SHEET: 01/01	REV: F

Tolerance	
X.	±0.50
X.X	±0.30
X.XX	±0.10
X°	±1°